Installation and operating manual

Swing gate operator
SWING-265/44, -265/29

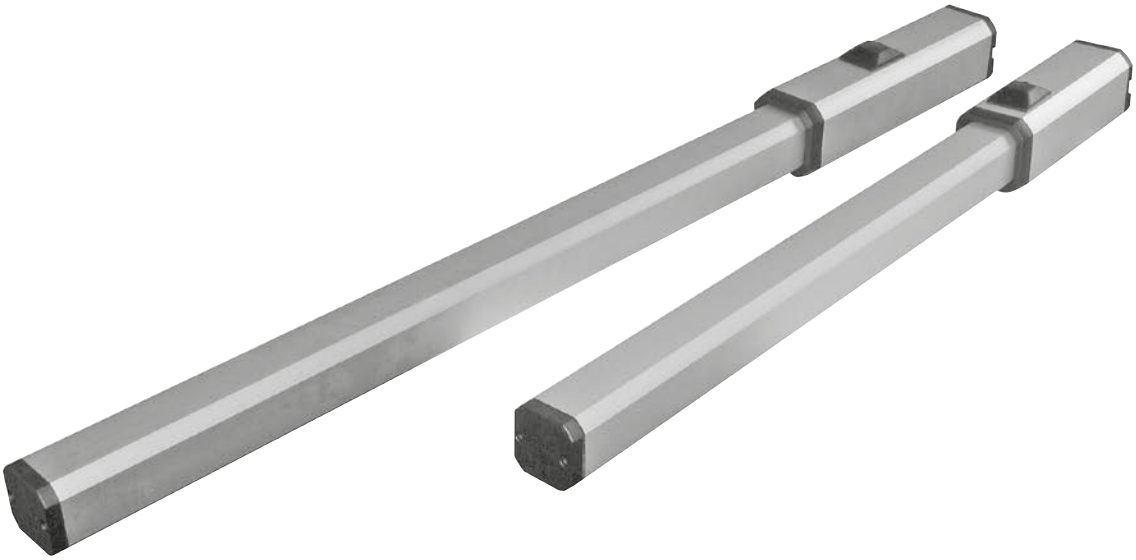

tousek®
GATE AUTOMATION

Important warning and safety notes for installation and operation

- These installation- and operating instructions form an integral part of the product “gate operator”. They have been specifically written for professional installers trained and skilled in the trade and should be carefully read in their full length before carrying out the installation. They describe the proper installation and operation of the sliding gate operator only, not of the overall device “automatic gate”. After the installation this manual has to be handed over to the user.
- **Installation, connection, adjustments, putting into operation, and servicing may only be carried out by trained professionals in full accordance with these installation- and operating instructions.**
- The EU Machine Directive, laws and rules concerning the prevention of accidents, and laws and standards which are in force in the EU and in the individual countries have to be strictly followed.
- The TOUSEK Ges.m.b.H. cannot be held liable for any claims resulting from disregards of the laws and standards in force during the installation and operation.
- The product may only be used in accordance with its original purpose, for which it has been exclusively designed, and which is described in these installation and operating instructions. The TOUSEK Ges.m.b.H. rejects any liability if the product is used in any way not fully conforming to its original purpose as stated herein.
- **The product is not suitable for installation in explosion-hazardous areas. The existance of inflammable gas and steam is of great danger!**
- The packaging materials (cardboard, plastic, EPS foam parts and filling material etc.) have to be properly disposed of in accordance with the applying recycling- and environmental procection laws. They may be hazardous to children and therefore have to be stored out of children´s reach.
- Before beginning with the installation the installer has to make sure that all mechanical components of the gate facility, like carrier profile/rail, gate frame and panels, guiding elements etc. are sufficiently supportive and resistant for the purpose of gate automation. Check also whether the product has transport damages.
- All electrical installations have to be made in full conformity with the applying rules and laws (e.g. using a fault current circuit breaker, proper grounding etc.).
- An all-pole disconnecting main switch with a contact opening-gap of minimum 3 mm has to be foreseen.
- When installing the safety device (photocells, safety edges, emergency-stops etc.) please comply with the valid direcitves/standards, the criteria of practical rules of conduct, the installation environment, the operating logic of the system and the effected force of the motorised gate. .
- The safety devices must secure possible bruise, shear and general danger areas of the motorised gate.
- **After installation the proper function of the gate facility and the safety devices has to be checked!**
- **After putting the gate in operation, the gate system must be checked with a suitable force measuring device in accordance with the applicable standards EN 12453 or national regulations.**
- Place warning signs and notes of the valid regulations to indicate danger areas .
- With each installation the identification data of the motorised gate has to be placed in a visible place.
- The label for the Handauslöser has to be placed next to its operating element.
- The electric motor heats up during operation. Therefore the device should only be touched after it has cooled off.
- Please make sure that no other persons are on site of the motorised gate area, especially in when operating the facility in hold to run mode (switch with OFF-pre adjustment) . The pre-adjusted OFF-button/switch has to be placed in sight of the actuated gate but away from moving parts. This switch/button (except key-switch) has to be mounted in min. 1,5m height and non-accessible to the public.
- **Children have to be instructed, that the gate facility as well as the belonging parts may not be used improperly, e.g. for playing. Furthermore handheld transmitters have to be kept in safe places and other impulse emitters as buttons and switches have to be installed out of children‘s reach.**
- Only original spare- and replacement parts may be used for repair of the product.
- The TOUSEK Ges.m.b.H. rejects any liability for claims resulting from usage of the product in combination with components or devices which do not fully conform to the applying safety laws and rules.
- The installer has to inform the user about all aspects of the automatic operation of the complete gate facility, as well as about emergency operation. The installer further has to supply to the user all instructions relating to the safe operation of the gate facility. The installation and operating instructions also have to be handed over to the user.
- The user has to be informed that he has to turn off the main power switch in case of malfunction of the product and that he can use the facility again after repair and adjustment works have been completed.
- **Please notice that the warranty will not be applicable if the label with the engine number has been removed or damaged.**

Maintenance

- **Disconnect the power supply during mounting, maintenance and repair works.**
- **Maintenance works may only be carried out by qualified personnel.**
- **With every maintenance, the door system must be checked with a suitable force measuring device in accordance with the applicable standards EN 12453 or national regulations.**
- **Check the proper function of the emergency release mechanism periodically.**
- **Check if all mounting screws are securely fastened periodically.**
- **Remove dirt from the operator periodically.**
- **Lubricate the pivot points of the operator with grease and the push rod with WD40 spray (twice a year or as needed).**
- **Maintenance and servicing of the complete gate facility has to be carried out according to the gate builder’s/ installer’s instructions.**

This manual is the sole property of the TOUSEK Ges.m.b.H. and may not be made available to competitors. All rights reserved. No part of it may be reproduced without our prior written permission. We will not accept liability for any claims resulting from misprints or errors. This edition of the manual replaces all earlier publications of the same.

Characteristics

- electrohydraulic operator for swing gates 230Va.c.
- max. leaf weight 600kg
- **closed hydraulic system**
- no bleeder screw
- suitable for subsequent installation
- incl. mounting material
- thermic protection
- duty cycle 40%
- CE

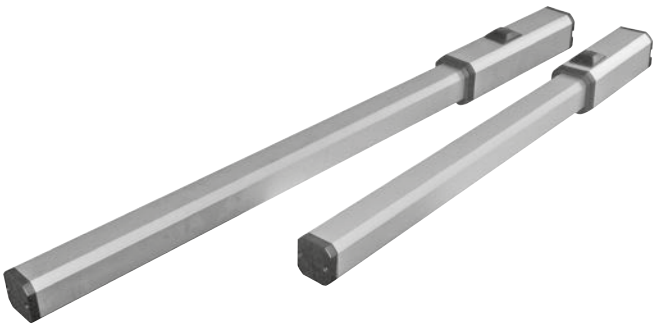

General characteristics

New or already existing swing gates can be easily and quickly automated with the TOUSEK 265 operator which has been designed for heavy swing gates and high operating frequencies.
The electrohydraulic operator consists of a quiet-running pump, a powerful single-phase electric motor and a precise piston-cylinder-unit.
These components are connected by a fully enclosed hydraulic system and contained in an anodized aluminum housing.
Two separate bypass-valves permit the continuous adjustment of the opening and closing forces.
The hydraulically self-locking models provide the safe blocking of the gate in the open and closed position and do normally not require the installation of an electric lock. However, on some installations it can be necessary to use an additional locking device, e.g. an electric lock, in order to achieve a secure fixing of the gate wings in the open and closed positions, even if the self-blocking models are used.
With the non-self-locking models an electric lock secures the gate in its closed position. If desired, the gate can be held in the open position by additional electromagnets.
An emergency release mechanism permits the manual operation of the gate in case of e.g. a power failure.

Technical Data

Swing gate operator SWING-	265 NB/29 N	265 AEB/29 N	265 NB/44 N	265 AEB/44 V1
Power supply	230V ± 10%, 50Hz			
capacitor	10µF			
current consumption	0,9A			
max. piston force	4500N	4500N	4500N	3000N
piston speed	10,0mm/s	10,0mm/s	10,0mm/s	20,0mm/s
motor r.p.m	1400 U/min			
max. stroke length	285mm	285mm	445mm	445mm
duty cycle	40%			
max. leaf weight	600kg			
max. leaf width	4,0m	2,5m	6,0m	3,0m
blocking with closed gate		•		•
Art.no.	11220090	11220080	11220100	11220110
Other	closed hydraulic system • force regulation through bypass valves • emergency release			

Note: max. gate wing widths are indicated for wind-permeable gates (e.g. stave gates, not full panel gates).

General installation notes

- **before mounting make sure that the gate positions for gate open/gate closed are defined by floor limit stops (4) (if this is not the case then these have to installed or as alternative you can use the Tousek travel limiter). The limit shall not be made through end positions of operator (the piston rod must NOT be completely driven to the limit – min. 5mm of spare travel) !**
- In order to increase the strength of the connections we recommend reinforcing the welding brackets **(1+2)** with corner plates **(3)**. The welding brackets included in the shipment may have to be modified to adapt to different gate wings and columns.
- for slim/wooden gates the front welding part **(1)** must not be mounted direclty on the gate. It should be placed under a flat steel.
- control the robustness of the gate structure, the easy movement of gate leaves and for older gates the wearout of all components. Broken or worn out parts have to be repaired or replaced.
- *) Attention: in order to avoid dirt and to ensure a reliable long term use, a minimum distance of **400mm to the passage way should be foreseen.**
- The mounting positions for the **front (1) and rear (2) welding brackets** can be seen in the following charts.

  For a horizontal alignment of the motor a vertical backfill (V=25mm) has to be used between den welding parts.

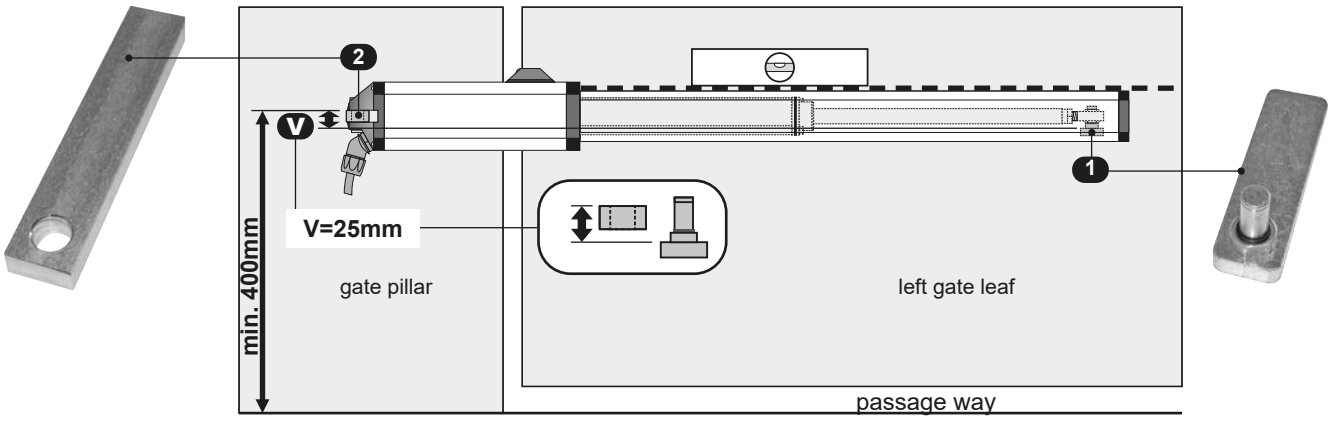

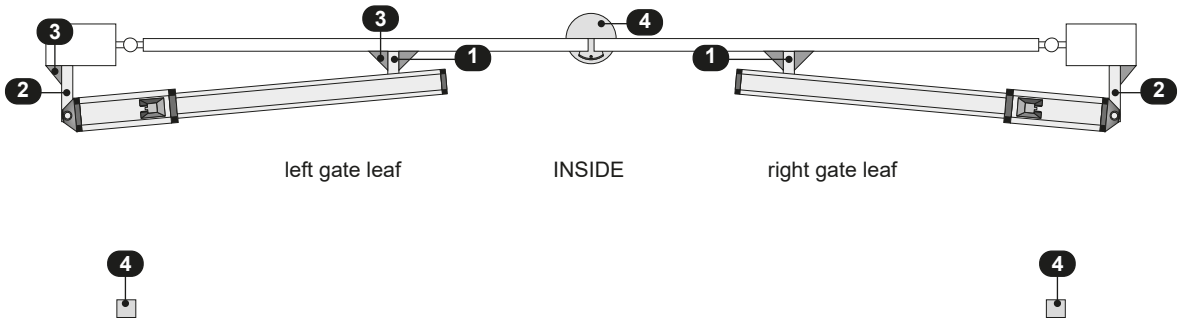

2a. Assignment of mounting points and attachment of welding parts

Mounting points

Note

The mounting positions for the front and rear welding brackets can be seen in the following charts.

The A, B, and D distances always have to be measured from the center of rotation of the gate wing´s hinge.

- **For a horizontal alignment of the motor a vertical backfill (V=25mm) has to be used between den welding parts.**

Mounting measures with different swing gate installations

Opening to the INSIDE
(Center of rotation in line with center axis of gate wing)

- **Profilstärke max. 60mm**

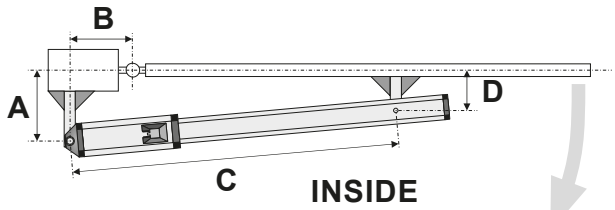

Opening to the INSIDE
(Center of rotation not in line with center axis of gate wing)

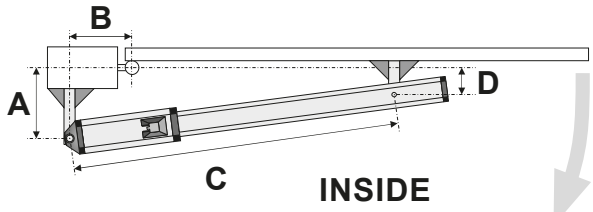

Mounting measures SWING 265/29 opening to the INSIDE		
Application	standard	measures for max. opening angle
leaf width max. up to	4,0m	3,5m
A (mm)	140	110
B (mm)	130	120
C (mm)	955	955
D (mm)	100	90
max. opening angle	95°	110°

Special case: opening to the OUTSIDE

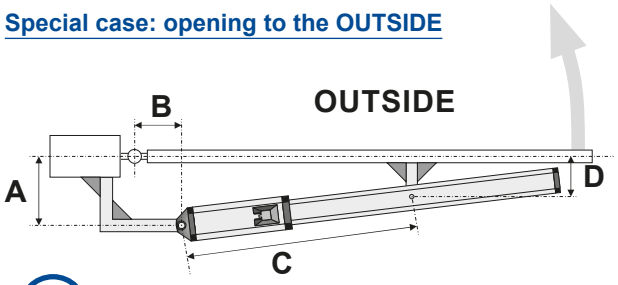

Note

- In this special case where a type 265 operator is installed on the inside of an outside swinging gate leaf, the version 265 AEB can be used up to a gate leaf width of 2.5 m.. On wider gate wings the 265 NB version has to be used, and an additional electric lock has to be installed.
- Furthermore, the rear connecting bracket has to be very strong or supported in order to limit vibrations.

Mounting measures SWING- opening to the OUTSIDE	265 AEB/29	265 NB/29
leaf width max. up to	2,5m	4,0m
A (mm)	120	130
B (mm)	120	130
C (mm)	685	685
D (mm)	95	95
max. opening angle	95°	95°

Installation on larger pillars

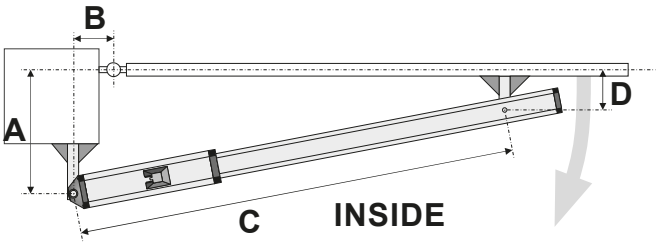

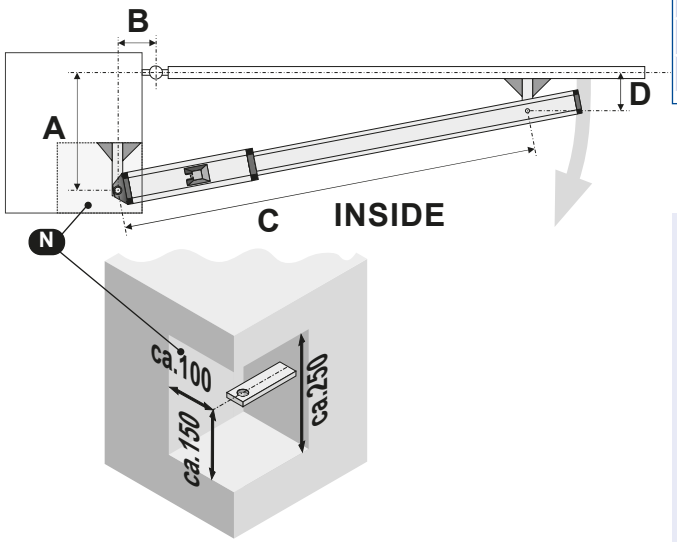

Mounting measures SWING- opening to the INSIDE	265 AEB/44V		265 NB/44N
Application	standard	for larger opening angle	for larger leaf widths
leaf width max. up to	3,0m		6,0m
A (mm)	210	175	210
B (mm)	200	175	200
C (mm)	1240	1240	1240
D (mm)	125	110	125
max. opening angle	95°	115°	95°

Note

- On existing larger gate columns the operator series 265/44 can be used.
- On larger gate columns it may be necessary to make a recess (N) in order to achieve the dimensions A and B.

Note: The recess in the gate column has to be big enough to make sure that the electrical supply cable of the operator will not be buckled.

Installation of welding parts

Installation of the rear welding bracket

- After having determined the center of rotation of the operator with the help of the chart, the rear welding bracket **(2)** can be installed (please reinforce with a corner plate **(3)**.

Important

- **keep backfill of welding parts!**

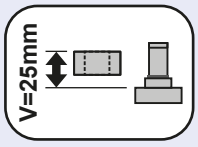

Installation of the front welding bracket

- Please fix the front welding bracket **(1)** to the gate wing inconformity with the dimension C. **Attention: check upper-/lower side** (*see pict.)*.
- **Make sure that the gate is completely closed, and that the operator will be installed in a level position.**
- **On gate leaves with thin panels or on wooden gate leaves the front welding bracket (1) cannot be directly attached to the gate wing. In such cases the front welding bracket has to be connected to a piece sheet metal which has been previously mounted to the gate wing.**
- The operator piston rod is then connected to the welding bracket with the help of a bolt and a Seeger circlip ring.
- **Also the front welding bracket (1) should be reinforced with a corner plate (3).**

2b. Installation of operator

- after having installed the welding parts **and** corner plate **(3)** install the operator as follows:
- **Before mounting make sure that the movable parts on the rotation points are lubricated!**
- place piston rod **(KS)** of operator with drilling of ball bearing **(KL)** onto the front welding part **(1)** and fix with snap ring **(1a)**.

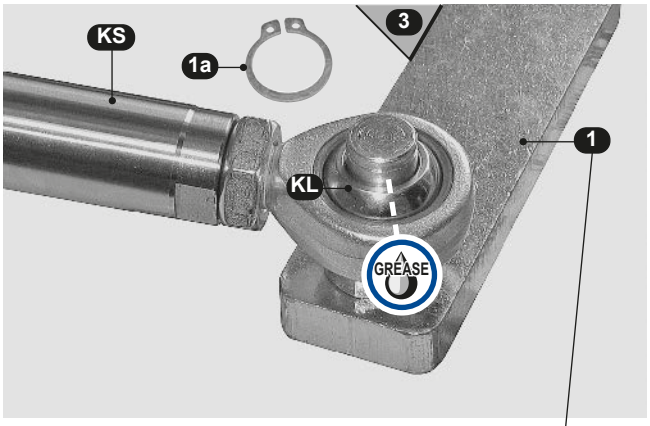

IMPORTANT

- **The operator piston rod (KS) must not travel out its whole length (at least 5 mm have to remain)! Thus the travel of the gate wing has to be limited by floor stoppers, or the Tousek piston rod stroke limiting device has to be used.**

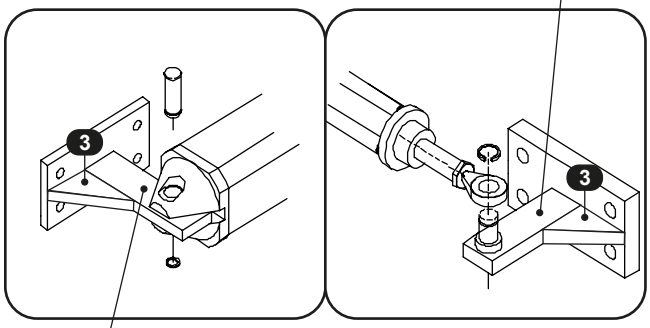

Lubricate movable parts

- **the rotation points of the operator before mounting must be well lubricated with grease! (e.g. drillings of welding parts and bolts/anchors for mounting the operator to the welding parts)**
- **Grease the automation regularly (according to the manteinance instructions)**

- now turn the gate leaf as much as the fork **(G)** of the operator can be suspended onto the rear welding part **(2)**
- now insert the bolt/anchor **(2a)** from above and fix it with snap ring **(2b)** .

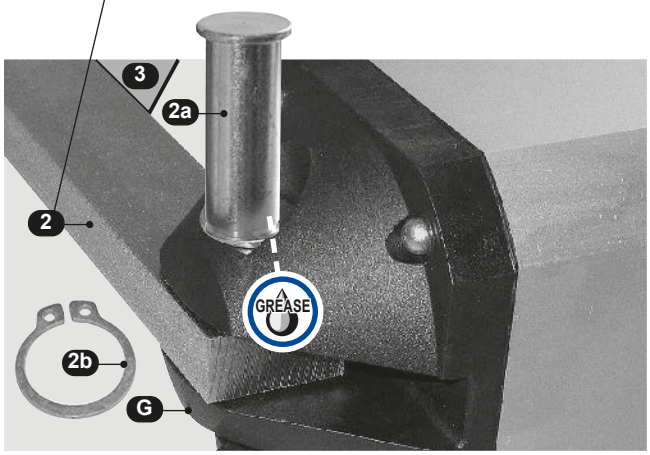

Readjustment and und attachment of cover

- Spray the piston rod (in extended position) with WD40 spray!
- In case the necessary remaining travel way of the piston rod (KS) can not be reached (min. 5mm) because of unprecise measurements, it is possible to unscrew a little bit the end of the piston rod **(E)**.
- Make sure to tighten the screw nut **(M)**.
- Now screw the two rods **(St)** into corresponding drllings of the operator.
- Now screw the two rods **(St)** into corresponding drllings of the operator.
- After having slid on the cover **(A) put on** the cap **(K)** and fix it with the 2 bolts **(S)** on the two rods **(St)**.

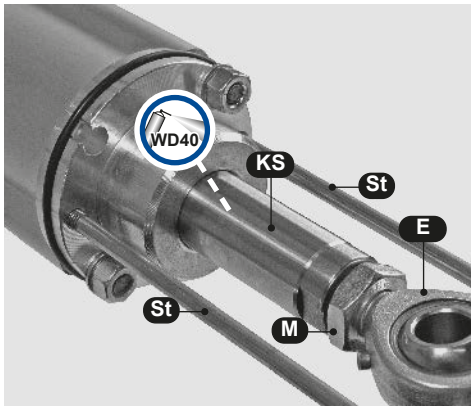

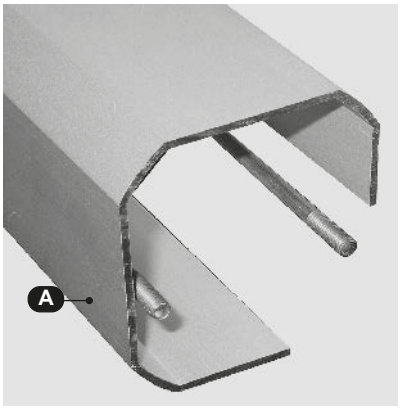

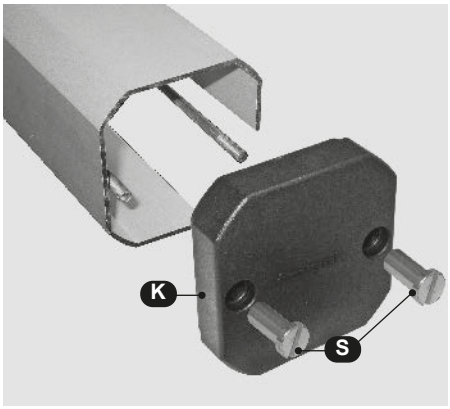

Greasing of the piston rod

- **Spray the piston rod (in extended position) with WD40 spray!**
- **Let the automation run two or three times (open and close it)**
- **Grease the automation regularly (according to the manteinance instructions).**

2c. Electrical connections

Warning

- **Before carrying out the electrical connections, the power supply of the gate facility must be turned off**
- **The safety regulations for electric shock prevention have to be complied.**
- **The device should only be connected by qualified personnel**
- **The device should not be used in an explosive environment !**
- **An all-pole disconnecting mains switch with a contact opening gap of min. 3 mm has to be foreseen. The gate facility has to be secured according to the valid safety regulations!**
- **IMPORTANT: The control lines (buttons, radio, photocells, etc.) have to be laid separately from the 230V lines (supply line, motors, signal lamp) and should have a max. length of 50m.**
  For lenghts > 50m use decoupling measures!

- **The gate facility must be turned off from power supply when making the electrical connections..**
- For the connection with the control unit please check the corresponding manual.
- For the connection of diverse safety devices, transmitters and other accessories please check the corresponding manuals (*please note cable/wire plan*).

2d. Force adjustment for opening and closing

Warning

- **For force adjustment please turn valves smoothly, without bolting or unbolting them completely. Please note that the motors are delivered with already optimal force adjustment.**
- **To ensure optimal safety against crushes the shear force should only be slightly higher than necessary in order to move the leaves for opening and closing. The force measured at the end of the leaf should not exceed the nationally prescriptive limits.**
- **Never completely screw in the bypass valves.**
- **The operator is <u>not</u> equipped with electronic limit stops. Therefore the motors will stop when the adjusted travel time on the control board has expired. The operating time (travel time) has to be adjusted so that when the gate leaves meet the end stops on the ground it still runs for 5-10 seconds.**

- Two force-adjustment-screws are situated on the lower side of the operator.
- when turning **clockwise** the force will be increased**.**
- when turning **counter clockwise** the operator force will be **decreased.**
- The forces for opening and closing have to be adjusted separately.

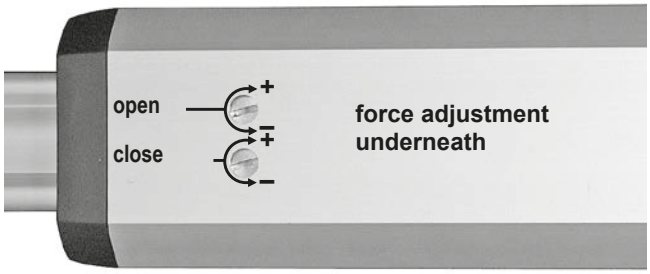

2e. Dis-installing the operator

To dis-install the operator please follow the reverse installation procedure.

Before dismounting the operator please make sure that the power supply has been disconnected!

3. Emergency release of motor

- If you need to release the motor for manual use, please proceed as follows:
- **Turn off power supply !**
- First, remove the plastic cover lid from the override mechanism, situated on the upper side of the operator. then insert the emergency override key and turn it max. 2 turns counterclockwise.
- Now the gate leaf can be slowly moved by hand (don´t try to move it faster than the motor would do).
- To set the operator back into its normal operation mode please turn the emergency override key clockwise until a firm resistance can be felt.
- Then put back the cover and turn on power supply.

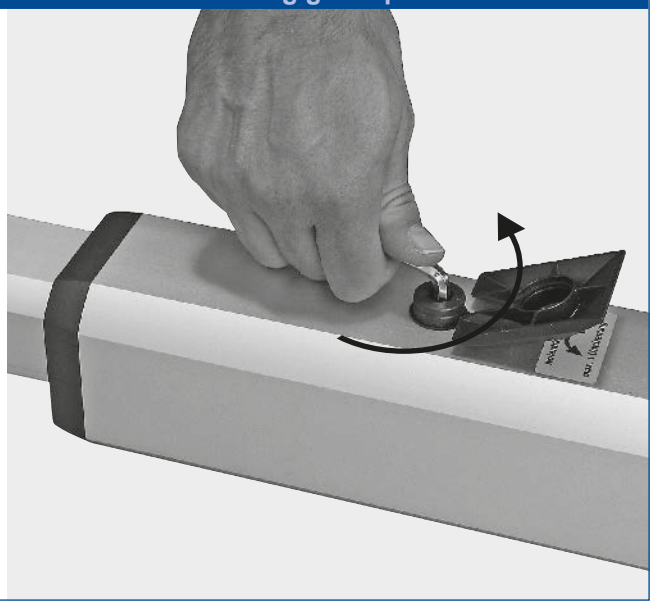

4. Cable plan

1 operator Tousek SWING 265
1a connection box
2 electronic logic control
(optional with integrated radio receiver)
3 external antenna (for increased range)
4 signal light
5 external fotocell
6 internal fotocell
(**T:** transmitter, **R:** receiver)
7 main power switch and fuse 12A
Note: An all-pole disconnecting main switch with a contact opening-gap of minimum 3 mm has to be foreseen.
8 pushbutton momentary contact switch
9 key-operated momentary contact switch
10 safety sensing edges
11 hinged lockiing bar
12 electric lock
13 floor stops

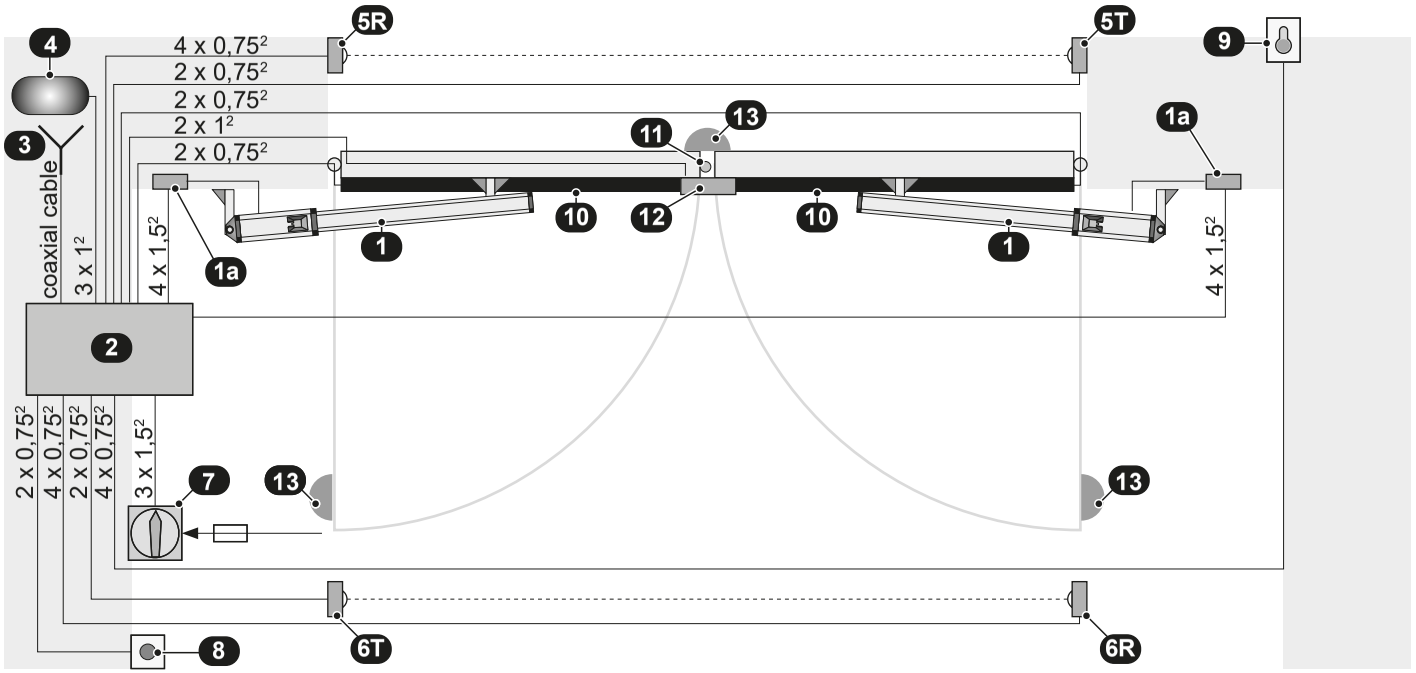

NOTE concerning cable laying

The electric cables have to be laid in insulating sleeves which are suitable for underground usage. The insulating sleeves have to be lead into the inner of the operator housing.

230 V cables and control lines have to be laid in separate sleeves and should have a max. length of 50m. For lenghts > 50m use decoupling measures!

Only double-insulated cables, which are suitable for underground usag may be used.

In case that special regulations require another type of cable, cables according to these regulations have to be used.

SAFETY NOTE

Please be aware that the beside picture is only a symbolic sample illustration of a gate facility and may therefore not show all safety devices required for your specific application. To achieve an optimum safety level at your gate facility, please make sure that all safety components and accessories which - according to the applying safety rules and laws - are required in your particular case (e.g. photocells, induction loops, sensing edges, signal lamps, traffic lights, mains- and emergency power off switches etc.) are properly installed, operated, and serviced.
All possible bruise, shear and general danger areas of the motorised gate have to be secured.
In this context please follow the EU Machine Directive, accident prevention rules and laws, as well as applying EU- and national standards in force at the time of installation and operation of the gate facility.
The Tousek Ges.m.b.H. cannot be held responsible for any consequences resulting from disregard of applying standards and laws during installation or operation of the gate facility.

The 0,75mm2 control lines are shown without ground lead. In order to facilitate connections we recommend using flexible wires and not using thicker wires for the control lines.

5. Dimensioned drawing

- dimensions for SWING 265/29 (for SWING 265/44)
- dimensions in mm

(1) front welding bracket (mounting on the gate - supported by gusset plate!)
(2) rear welding bracket (mounting on the gate pillar/column - supported by gusset plate!)
(V) respect a **backdraft V (= 25mm) of front and rear welding part!**

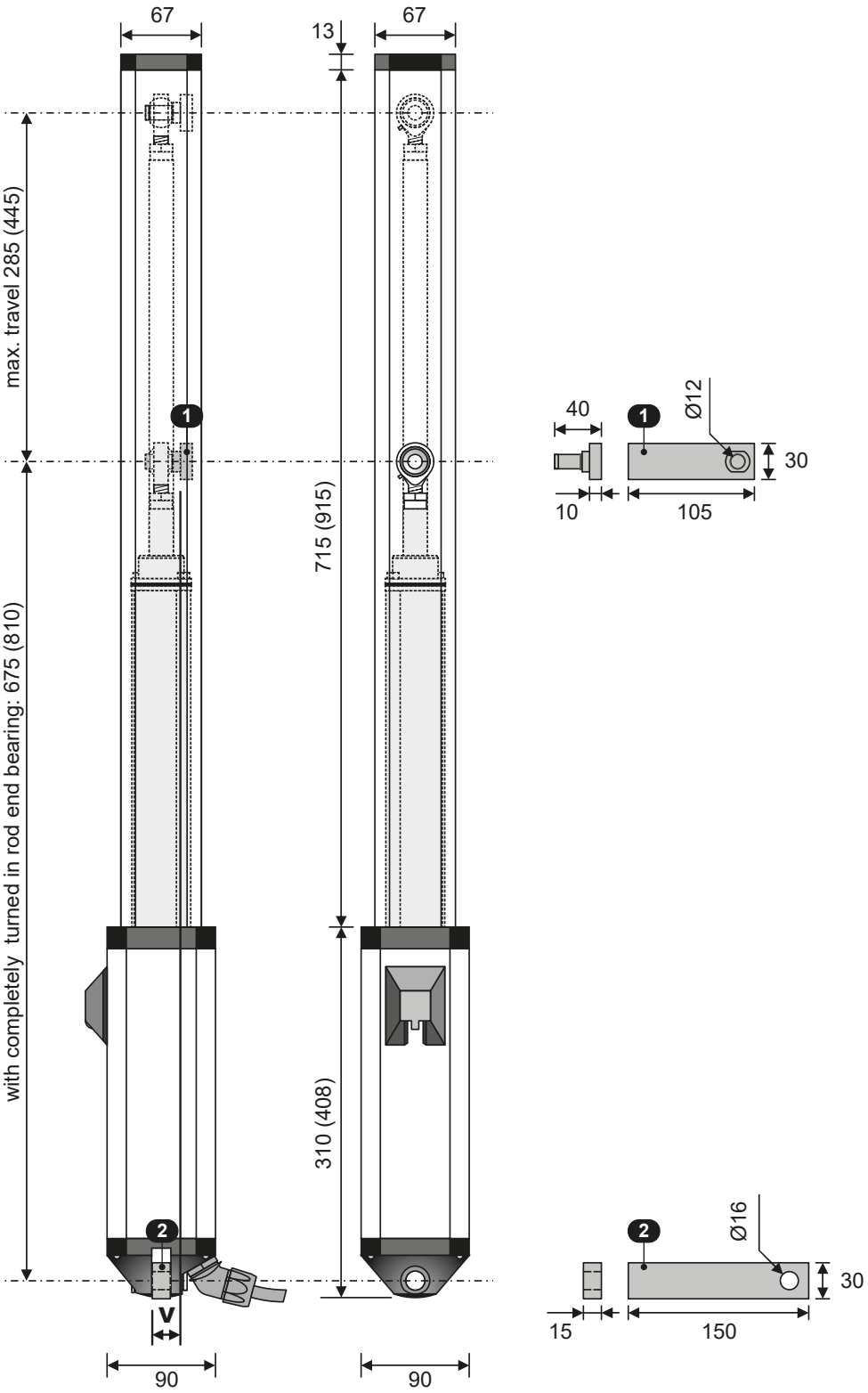

We reserve the right to change dimensions and technical specifications without prior notice.

Declaration of incorporation

In compliance with EC Machine Directive 2006/42/EC, Annex II B for the installation of an incomplete machine.

We hereby declare that the following product, as well as its version, put by us into circulation, complies with the essential requirements of the Machinery Directive (2006/42/EC), due to its design and type of construction.

The validity of this declaration will cease in case of any unauthorized modifications to the products.

The product:

Swing gate operator SWING-225 AEB/29N, -225 NB/29N, -265 AEB/29N, -265 AEB/44V1, -265 NB/29N, -265 NB/44N, Underground Swing gate operator SWING-270 AEB, -270 NB

is developed, designed and manufactured in accordance with:

Machinery Directive 2006/42/EG
Low Voltage directive 2014/35/EU
Electromagnetic compatibility 2014/30/EU

Applied and used standards and specifications:

EN 60335-1
EN 60335-2-103
EN 61000-6-3
EN 61000-6-2

Following requirements of Annex I of the EC Directive 2006/42/EC are met:

1.1.2, 1.1.3, 1.1.5, 1.2.1, 1.2.2, 1.2.3, 1.2.6, 1.3.2, 1.3.4, 1.3.7, 1.5.1, 1.5.4, 1.5.6, 1.5.8, 1.7

The relevant technical documentation is compiled in accordance with Annex VII, Part B of the EC Machinery Directive 2006/42/EC.

We undertake to submit it in electronic form and within a reasonable time to the market surveillance authorities in response to a duly substantiated request.

TOUSEK Ges.m.b.H., A1230 Wien, Zetschegasse 1, Austria

is authorized to compile the technical documentation.

The incomplete machine cannot be put into service, until it is determined that the machine, into which the incomplete machine has to be inserted, complies with the the Machine Directive 2006/42/EC.

Eduard Tousek, CEO

Vienna, 01. 01. 2013

EC Declaration of Conformity

In compliance with EC Machine Directive 2006/42/EC, Annex II, Part 1 A.

When the described operators are connected to a gate they form a machine in the sense of the EC Machine Directive.

Relevant EU directives:

Construction Products Directive 89/106/EWG
Machinery Directive 2006/42/EG
Low Voltage directive 2014/35/EU
Electromagnetic compatibility 2014/30/EU

We hereby declare that the following product, in the version put by us into circulation, complies with the essential requirements of the Directives mentioned above. The validity of this declaration will cease in case of any unauthorized modifications to the products.

Product:

_____

Gate description

_____

Motor description

The incomplete machine cannot be put into service, until it is determined that the machine, into which the incomplete machine has to be inserted, complies with the the Machine Directive 2006/42/EC.

_____

Installation company

_____

Address, ZIP code, Place

_____

Date/ Signature

Motor number (Type plate): _____

Other components:

www.tousek.com

tousek PRODUCTS

- sliding gate operators
- cantilever systems
- swing gate operators
- garage door operators
- folding door operators
- traffic barriers
- electronic controls
- radio remote controls
- key operated switches
- access control
- safety devices
- accessories

tousek®
GATE AUTOMATION

Tousek Ges.m.b.H. Austria
A-1230 Vienna
Zetschegasse 1
Tel. +43/ 1/ 667 36 01
Fax +43/ 1/ 667 89 23
info@tousek.at

Tousek GmbH Germany
D-83395 Freilassing
Traunsteiner Straße 12
Tel. +49/ 8654/ 77 66-0
Fax +49/ 8654/ 57 196
info@tousek.de

Tousek Benelux NV
BE-3930 Hamont - Achel
Buitenheide 2A/ 1
Tel. +32/ 11/ 91 61 60
Fax +32/ 11/ 96 87 05
info@tousek.be

Tousek Sp. z o.o. Poland
PL 43-190 Mikołów (k/Katowic)
Gliwicka 67
Tel. +48/ 32/ 738 53 65
Fax +48/ 32/ 738 53 66
info@tousek.pl

Tousek s.r.o. Czech Republic
CZ-252 61 Jeneč u Prahy
Průmyslová 499
Tel. +420 / 777 751 730
info@tousek.cz

your service partner:

tousek
EN_SWING-265_42600119
15. 09. 2020

We reserve the right to change dimensions and/or technical specifications without prior notice. Claims resulting from misprints or errors cannot be accepted.

STAATLICH AUSGEZEICHNETES UNTERNEHMEN